Electromagnetic Compatibility and Power Electronics for Railway Systems

Prof. Eric. Cheng
Director of Power Electronics Research Centre
Electric Vehicle Laboratory
EMC Laboratory
18 Mar 2017

One-day Conference on Power Supply, EMC and Signaling, in Railway Systems

EMC Lab
Department of
Electrical Engineering
電機工程學系

Outline

- Our Centre
- Source of EMI
- HSR –High Speed Railway
- EMC in HSR
- **EMC in Railway is so Challenging**
  EMI Sources in HSR
- *Magnetic Shielding*
- *EMC/EMI Standard related to Railway*
- Discussion and Future work
- Acknowledgement

Electromagnetic Coupling
Effect of Levitation

Magnetic levitation (maglev)

- Speed :
- 110km/h to 550km/h
- For 220km/h
- Guidance force:2300N
- Levitation force: 8500N
  - Per electromagnet unit
- Airgap 10mm
- Current: 35A
- Number of turns: 190/300

Electromagnetic field

- Gap field 0.8 Tesla
- Max field 1.5 Tesla
- Adopt Linear induction motor for propulsion and
- Electromagnetic suspension for levitation

Analysis and Control of Electromagnetic Coupling Effect of Levitation and Guidance Systems for Semi-High-Speed Maglev Train Considering Current Direction
Jae-Hoon Jeong; Chang-Wan Ha; Jaewon Lim; Jang-Young Choi
IEEE Transactions on MagneticsYear: 2017

Interference between DC and AC

- 50Hz and DC
  - 50Hz voltage is induced on DC due to capacitive field coupling
  - 50Hz electromagnetic force (emf) induced to magnetic coupling

- EMF induces on any coils
- This may affect:
  - Pacemaker
  - Some sensitive devices with longer wiring and loop
- For High speed rail 200km/h,
- Emf induced by static field due to electronics on the train

Induced EMF at high speed

- $\oint Hdl = Ni$
- Any loop of conductor under change of magnetic field
- A small loop or wire in a high speed train with environment of field may therefore induced voltage in the wire and that due affect the operation of the electronics related to the wire .

Pantograph surge voltage

- Rising of Pantograph induces surge current
- Couple to shielding layer
- Cause other electromagnetic interference
- Caused induction heating effect

Induced voltage

- When pantograph and catenary contact
- Surge voltage reach 5kV and
- oscillate for few us
- Couple to other part or car body, through high voltage cable shielding layer, voltage transformer

Influence of grounding mode on surge voltage in the process of pantograph rising for high speed train
Wan Yusu; Liu Yaoyin; Gao Guoqiang; Wu Guangning
2016 IEEE International Conference on High Voltage Engineering and Application (ICHVE)
Year: 2016

Pantograph arcing

- The radiated frequency in GSM (876 to 925MHz) that is affected
- The arcing frequency could be high, up to 100Hz.
- Transient frequency is much higher
- The emitted power could be high

Analysis of the coupling path between transient EM interferences produced by the catenary-pantograph contact and on-board railway communication antennas
H. Fridhi; V. Deniau; J. P. Ghys; M. Heddebaut; J. Rodriguez; I. Adin
2013 International Conference on Electromagnetics in Advanced Applications (ICEAA)
Year: 2013

EMI Source- Track

- Usage of the rail for both current return and signalling (same conductor for high voltage and low voltage applications)
- Depending on soil characteristics for long track sections the return currents could find its path either through the rail or through the soil
- The Emf, both conductive and radiative mat affect all tehse signalling system near the track

False signaling in track circuit due to DC component of the arcing.

EMI Source- Pantograph arcing

- Usage of sliding contact to draw high power to the rolling stock through a contact area of few square mm, which causes
  1. Distorted supply voltage and current waveforms
  2. Generation of a net DC components, harmonics, including even harmonics, and interharmonics
  3. Wideband electromagnetic noise emissions
  4. Transients and surges

Pantograph arcing and associated frequency spectrum

- Distorts the regular waveform of the supply voltage and current and generates transients
- Propagate along the railway system, including tracks, track circuits, other locomotives on the same track, substation
- Causes interference voltages and currents in the frequency range from DC to several MHz and radio frequency emissions up to GHz.
- Net DC currents can cause interference to track circuits operating on DC supply voltage.

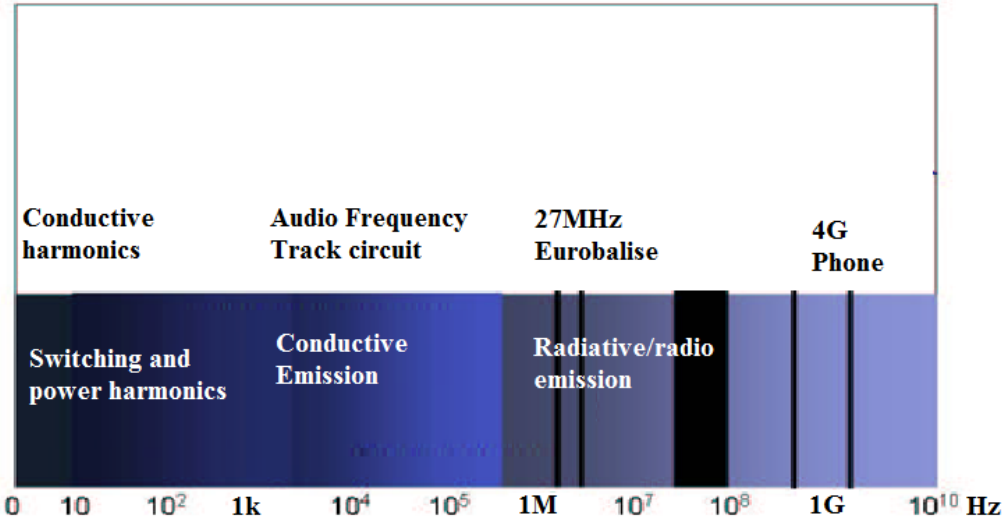

https://www.kth.se/en/ees/omskolan/organisation/avdelningar/etk/research/topics/emc/2.18951/emc-of-railways-pantograph-arcing-1.47295

Frequency spectrum of the conducted and radiated emission from pantograph arcing and associated railway systems with their frequency bands

Arcing damage

- Contact wire can enhance the wear and tear, resulting in poor sliding contact
- That affect the age and the safety
- High voltage and current transient ahs high dv/dt and the di/dt

Wear in contact wire

Techniques For The Reduction of Interference Effects

- Adopting an earthing/bonding strategy and ensuring that an adequate RF path is provided to earth via earth braids rather than multi-core cable which may be sufficient for a Safety earth
- Using filters at the point of entry of power, signal and control cables
- Addressing screening as part of overall earthing/bonding strategy, eg should the screen be terminated at both ends?

Research on arcing

- Develop the model of the arcing
- Under high voltage and high current
- Examine the emission and all transients and all associated effects
- Examine the reduction method

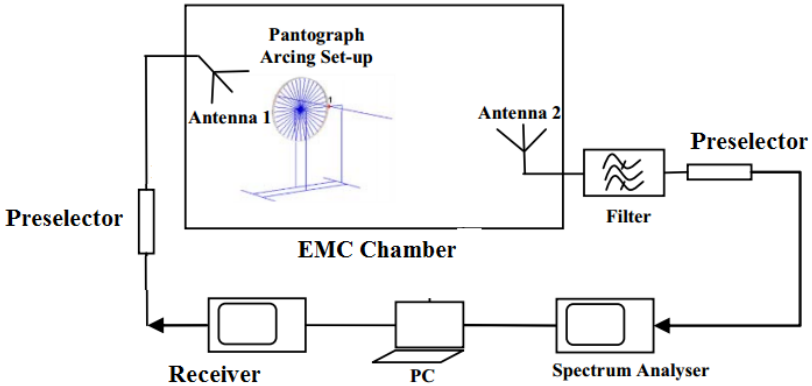

Super-capacitor and arcing

- The transient could propagate through the pantograph
- High power super-capacitor have high transient current and low impedance

Research on High Power Management (HPM)

- Study on ultra-capacitors and its high transient by-pass
- Design and building of monitoring systems and super-capacitor energy storage system
- Reduction of the high transient and reduce the coupling to other parts

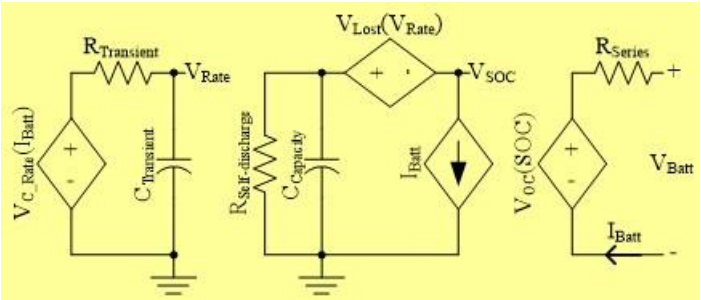

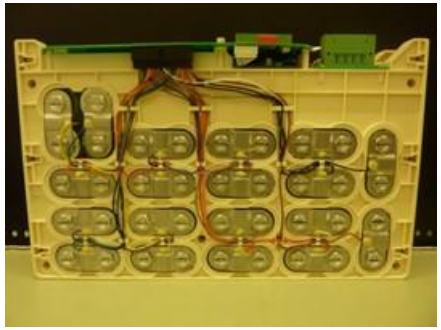

Super-cap modules

Designed Super-capacitor compensator for arcing

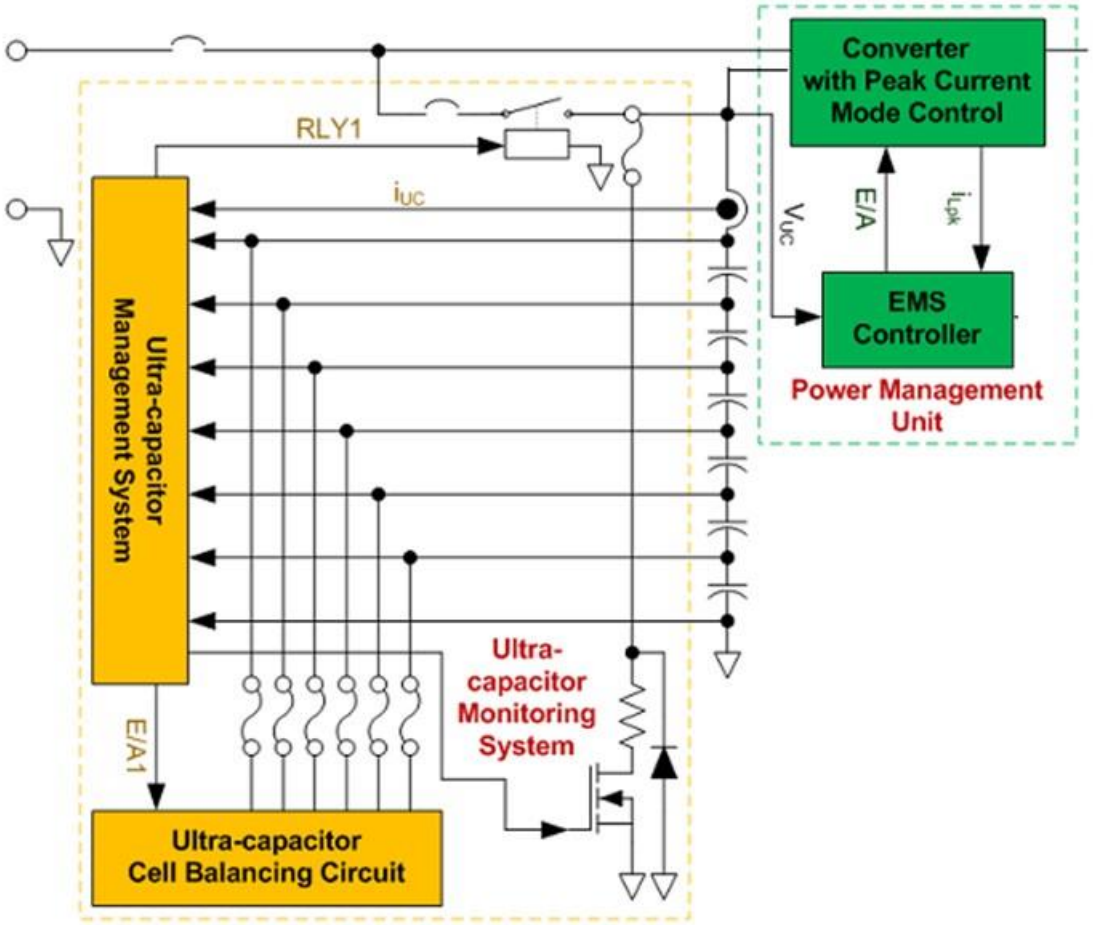

HSR –High Speed Railway
高鐵

Features of a high speed railway

- Greater gradients are allowed on high speed lines than conventional railways.

  – modern high speed trains are extremely powerful, TGVs generate as much as 12 000hp, steam engines were no where near as powerful (about 1,000hp) in the era when conventional railways were built.

- The faster a train travels the less it will slow down for the same rise in height.
- High Speed induces higher EMI
- Even static field under high speed will induce EMI

Features of a high speed railway

- Rolling stock
  – Articulated multiple units, Steel or aluminium
  –Power cars and a number of carriages, including a powered bogie in each of the carriages adjacent to the power cars.
  – Power output of several MW under 25 kV.
  – Pantographs, suspensions, distributed power trains, overhead lines

How does it stop?

- Dynamic brakes, brake shoes for emergency stops.
- Trailers are equipped with four disks per axle, and backup brake shoes.
- Magnetic induction track brakes are planned for the next models.
- Maglevs are slowed down in the same way it is propelled, by superconducting magnets.
- All induce emissions

EMC/EMI in HSR

高速列车中的电磁兼容和电磁干扰

Why EMC in Railway is so Challenging

Modern developments within the railway bring great benefit meanwhile bring great challenge in EMC.

- Usage of sliding contact to draw high power to the rolling stock through a contact area of few square mm, which causes
  1. Distorted supply voltage and current waveforms

     电压电流波形畸变
  2. Generation of a net DC components, harmonics, including even harmonics, and interharmonics

     产生直流分量，谐波，间谐波
  3. Wideband electromagnetic noise emissions

     宽电磁噪声辐射
  4. Transients and surges

     瞬变和浪涌

Why EMC in Railway is so Challenging

- Wide variations in the power supply configurations, layout and system topologies between different trains and at different sections of the railway infrastructure

  列车及在铁路设施的供电配置，布局和系统拓扑存在很大差异

- High Speed Trains are bulk dynamic loads and their speeds, electrical loads, currents etc. vary in a wide range.

  高速列车是大动态负载，速度，电负荷，电流等变化大

- Usage of the rail for both current return and signalling (same conductor for high voltage and low voltage applications)

  路轨同时为电流和信号回路 （高低压）

- Depending on soil characteristics for long track sections the return currents could find its path either through the rail or through the soil

  回流通过轨道或土壤

Why EMC in Railway is so Challenging

- All these DC components and harmonics propagates in the entire traction power and signalling system causing EMI issues:
  - Saturation of different Transformers used, i.e., booster transformers, auto transformer, substation transformer, vehicle transformers etc.
    变压器饱和
  - Saturated transformers are a source of even harmonics and interharmonics 饱和变压器又是谐波和间谐波源
  - Radiated EM fields cause interference to wireless services, like GSM-R communication, other radio and wireless based services
    对无线通讯干扰
  - DC components cause corrosion of bearings 直流导致腐蚀
  - Even harmonics and interharmonics affect the control systems of the drives and power electronics 谐波间谐波影响系统控制和驱动
- Different levels of inrush current, wide band frequency content of transients and surges due to switching in the traction power system, raising and lowering the pantograph UP and DOWN etc.

Why EMC in Railway is so Challenging

With the recent development trends in the propulsion system, where IGBT based drive system are prevailing over GTO based systems. On the other hand more and more sensitive equipment and sensors are being used for control and signalling purposes.

- Higher frequency switching higher order harmonics 高频高次谐波
- Electromagnetic environment is complicate because:电磁环境复杂原因
  - Difficulties in simulating the high frequency behaviour of the power electronic devices and the complete drive systems
    模拟功率电子器件和完整驱动系统的高频性能方面的困难
  - Schematic details and layout of the complete system vary widely
    完整系统的示意图细节和布局各不相同
  - Difficuties in performing test: due to cost, inaccessibility of the system
    测试困难：成本，系统的不可访问性
  - System topologies vary widely and changes
    系统拓扑不同
  - High complexity as well as high sensitivity makes it difficult to predict the associated EM environment
    高复杂性及高灵敏度使得难以预测相关的电磁环境

Sources of Electromagnetic Emissions
高铁的干扰源

Infrastructure:

- Substation, rail and catenary have interfacing.
- High frequency harmonic and low frequency harmonics
- High speed increases the change of induction
- High frequency conduction and low frequency conduction in a cable has different distributions.
- Harmonic path has conductive and magnetic coupling to other location, through connection and evening or air.

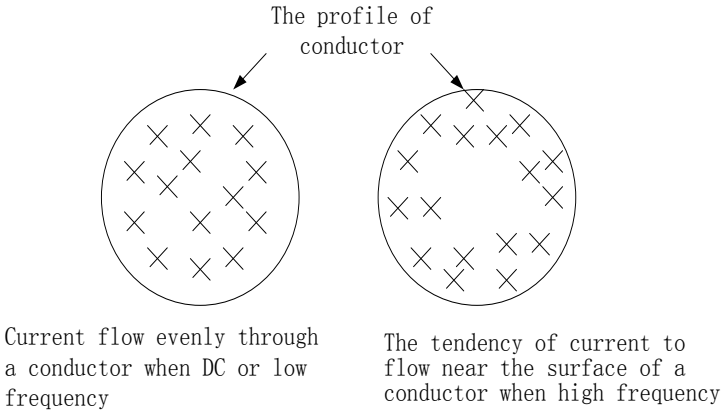

Power cable.

On board sources _ Power electronics:电力电子设备

- Fast switching of the power electronics, harmonics from ac/dc converters, ac/ac or dc/ac inverters and dc Choppers 快速放电
- Broadband interference from dc commutator motors and drives of the propulsion systems.

  电机及驱动系统
- emission from discharges in the power, display units and rotating machineries etc.

  电源放电

Power Electronics Components in Traction system
电力电子设备

- Component examples for HST & VHST Trains

3 Phase Vacuum contactors for PMM isolation & protection

Asynchronous & PMM motor

Traction converter with integrated auxiliary converter

VHST auxiliary inverter case

Control electronics

High performance power module

Reduction of Interference Effects

Techniques For The Reduction of Interference Effects

- Adopting an earthing/bonding strategy and ensuring that an adequate RF path is provided to earth via earth braids rather than multi-core cable which may be sufficient for a Safety earth接地、结合
- Providing EMI gasketting around panel doors EMI垫圈
- Using filters at the point of entry of power, signal and control cables 滤波器
- Categorization and segregation of high and low speed electronics; power electronics分类隔离
- Segregation of cables: separation of power and control cables, ensuring power and control cables cross at right angles
  - 电缆分离

Techniques For The Reduction of Interference Effects 减少干扰的措施

- Twisted wire pairs (TWP) and Screened cables –ensuring screens are given a 360 degree termination.绞线和屏蔽电缆
- Addressing screening as part of overall earthing/bonding strategy, eg should the screen be terminated at both ends? Yes for RF, but what about dc leakage currents?屏蔽接地策略
- RFI from electric trains with inverter drives can be minimized by optimizing the device conduction strategies,

  优化控制策略减小驱动的射频干扰
- Use soft-switching for power conversion
- Use multi-level inverter to reduce the switching loss, emission and frequency.

Soft-switching

- All switching devices are under zero-voltage switching

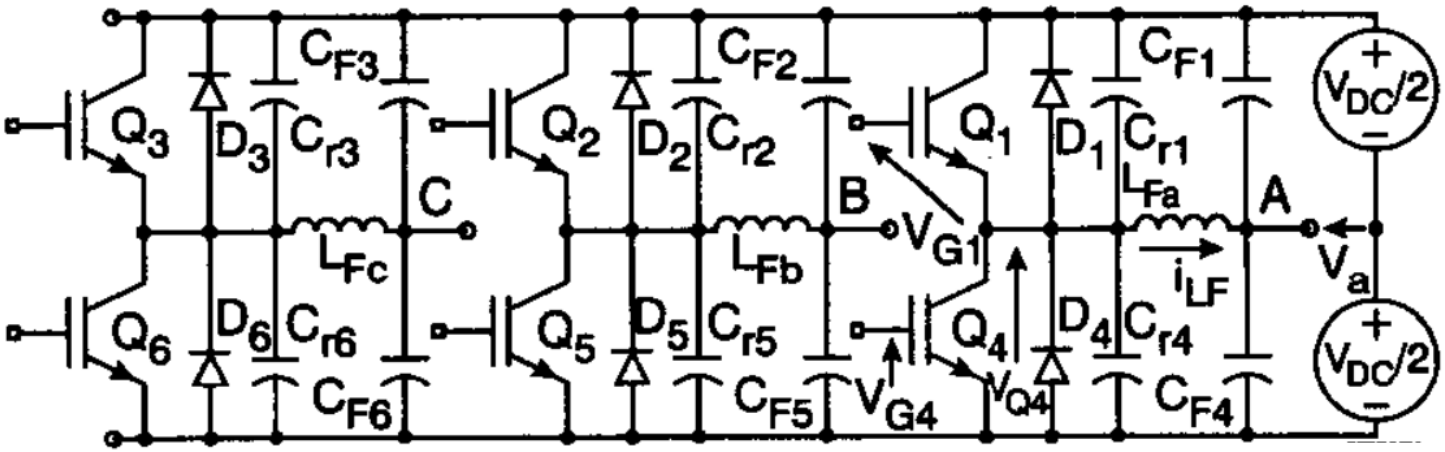

Multi-level inverter

- Reduce switching frequency
- Reduce switching loss
- Reduce voltage stress
- Sharing if the components

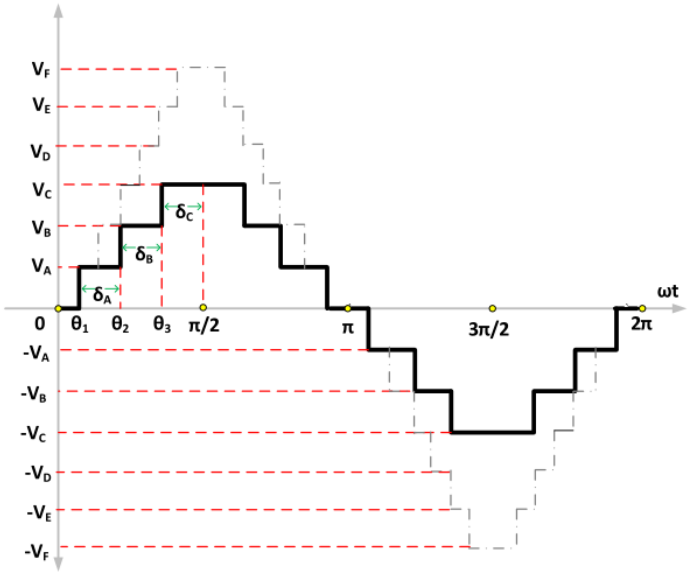

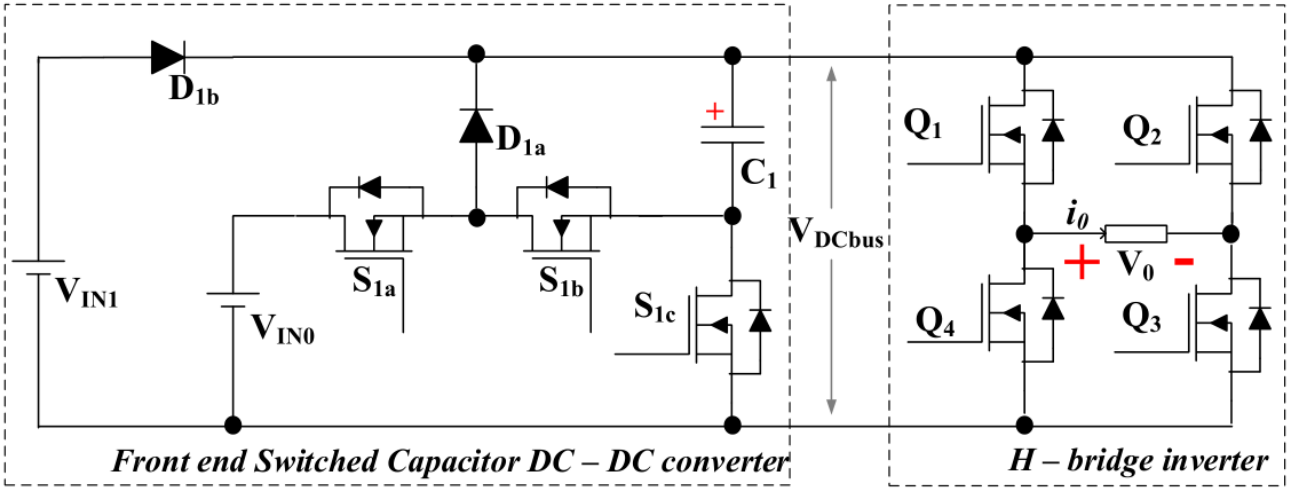

Techniques For The Reduction of Interference Effects

- Earthing impedance
- Active filtering and harmonics compensation
- New polymer bonded magnetic materials
- Combination of active compensation and line filtering
- New magnetic topology design
- Packaging of magnetic components
- Cable techniques

Magnetic Shielding

电磁隔离

Magnetic Shielding
电磁隔离

- Electromagnetic interference is now the key safety issue in transportation and in the city. 城市及交通中的电磁辐射成为安全隐患
- High frequency power operation in traction system is now very common. For high-speed rail, the power level is in 10 MW and voltage is in 27.5 kV. 牵引系统高频电力转换尤其是高压大功率 情况下电磁辐射严重
- The motor is electric and the switching frequency or the carrier frequency is high 5kHz. The switching action of the transistors in the motor inverter generates high frequency radiation. 电机驱动器的开关产生高频辐射
- The radiation will have penetration to the control electronics, signal system and vehicle computer. 辐射会干扰到控制系统信号系统以及车辆计算机

Raw materials engaged原材料

Composition成分

Naming	Composition of the initial mixture (mass concentration, wt%)		
	Fe_2O_3	NiO	ZnO
NiZn(50:50:0)	50	50	0
NiZn(50:45:5)	50	45	5
NiZn(50:40:10)	50	40	10
NiZn(50:35:15)	50	35	15
NiZn(50:30:20)	50	30	20
NiZn(50:25:25)	50	25	25
NiZn(50:20:30)	50	20	30
NiZn(50:15:35)	50	15	35

Preparation of Mn Zn Ferrite 锰锌铁氧体

Name	Molecular formula	Molecular weight
Iron(III) oxide	Fe2O3	159.69
Manganese(II) oxide	MnO	90.94
Zinc oxide	ZnO	81.39

Size of micro-ferromagnetic materials used

The composition and physical properties of the cobalt powder

Type	Co (≥ %)	Impurities (≤ %)						Bulk density (g/cm3)	Particle size (μm)	Particle size (Mesh)
		Ni	Fe	Cu	C	Si	O			
Co	99.6	0.10	0.04	0.01	0.02	0.02	0.25	0.60	0.6-3.0	300-400

The composition and physical properties of the nickel powder

Type	Ni (≥ %)	Impurities (≤ %)									Bulk density (g/cm³)	Particle size (μm)
		Mn	Ca	Cu	As	Mg	Si	Fe	Al	O		
Ni	99.7	0.002	0.015	0.050	0.001	0.002	0.005	0.006	0.005	0.250	0.50	2-3

Procedure程序

Micro-ferromagnetic 微磁材料顆粒

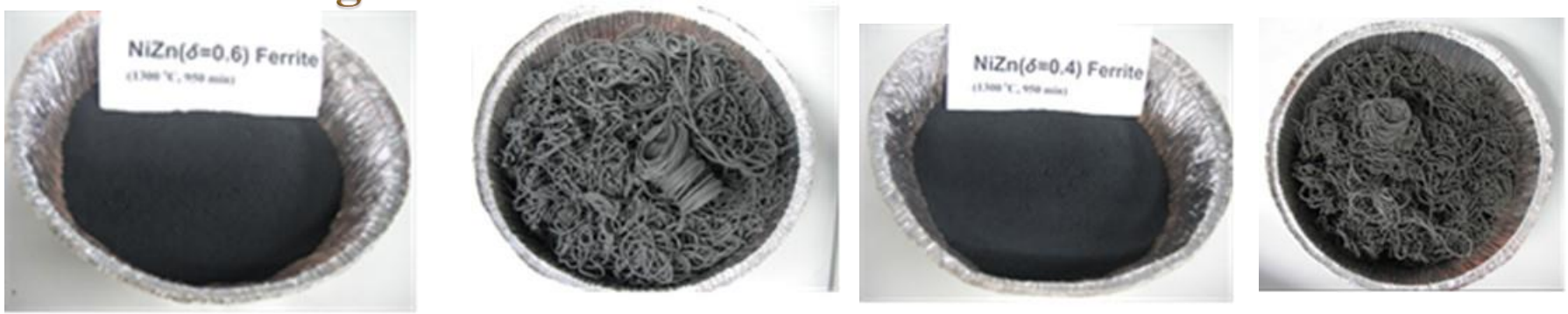

Typical photos for NiZn Ferrite materials (1300°C, 950 minutes, δ= ZnO/Fe_2O_3)

Extrusive composites半成品

Typical images of the extrusive composites

(a) PMMA—Co(30% : 70%), (b) PMMA—Ni(30% : 70%), (c) PMMA—NiZn(50:50:0) (40% : 60%).

Classical shielding materials

- Solid metal and the frequency range is not very wide
- Frequency response, especially at high frequency is poor 高频频率响应差
- Ferrite 铁氧体
  - High frequencynresponse is good高频响应好
  - It is difficult to use ferrite thickness of a few mm because the material is brittle由于材料易碎，很难采用几mm的厚度
  - Relative permeability of over 2000. That is the magnetic flux conductivity in ferrite is 2000 times of air. In practice, a lower value may be good enough.
  - 相对磁导率超过2000，实际上低磁导率足够

New screening material

- Micro-ferromagnetic
- μ_r =50, 100 and 200
- plastic mixed with magnetic materials with micrometer size 细小磁材料和塑胶材料混合而成

Different Micro-ferromagnetic developed

		5 kHz	50 kHz	100 kHz	500 kHz	1 MHz	2 MHz	10 MHz
10%PE 90%NiZn(50:20:30 mol) (1100 °C, 20 hours)	L (μH)	43.98	42.55	42.40	42.03	41.98	42.29	55.54
	μ_r(new)	33.12	32.04	31.93	31.65	31.61	31.84	41.82
10%PE 90%NiZn(50:20:30 mol) (1300 °C, 950 minutes)	L (μH)	56.00	55.45	55.26	54.86	55.01	55.59	80.58
	μ_r(new)	42.17	41.75	41.61	41.31	41.42	41.86	60.68
10%PE 90%NiZn(50:30:20 mol) (1300 °C, 950 minutes)	L (μH)	50.49	49.38	49.27	48.98	49.06	49.77	77.51
	μ_r(new)	38.02	37.18	37.10	36.88	31.19	37.48	58.37
10%PE 90%NiZn(50:40:10 mol) (1300 °C, 950 minutes)	L (μH)	38.30	37.94	37.84	37.53	37.47	37.61	48.86
	μ_r(new)	28.94	28.57	28.49	28.26	28.21	28.32	36.79

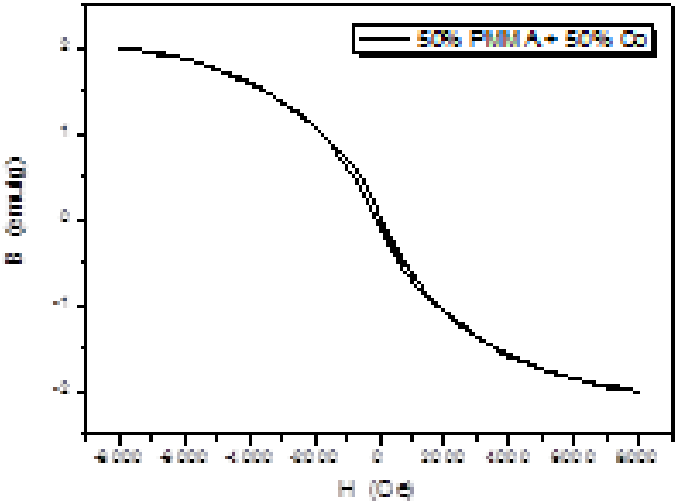

The hysteresis loops of the extrusive composites

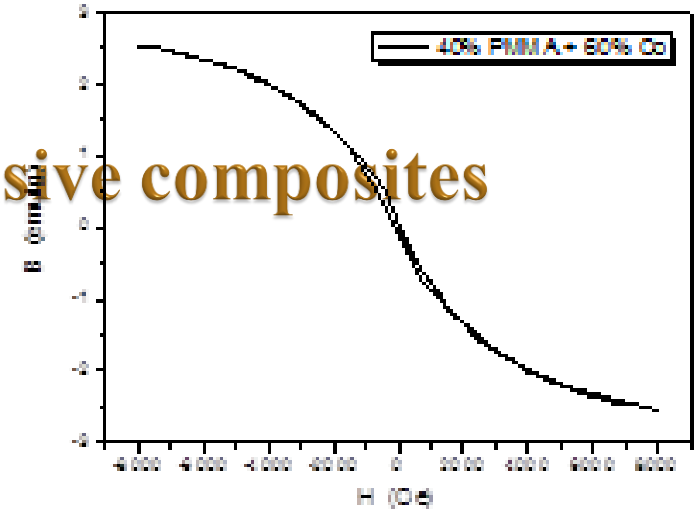

Test against Direct current (DC) excited field
直流场激励测试

- Nearly infinite is exposed to a magnetic field with constant B value 放置于恒定磁场
- Thickness of the shield = 3 mm
  隔离层3mm
- One side of the shield nearly equal to 1 T
  辐射场1T
- Relative permeability is “new screening material“ μr 200 to 50 新材料磁导率200-50

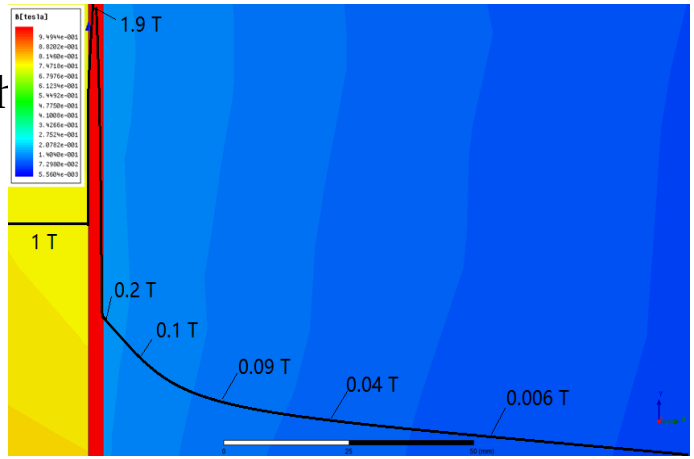

μr =200

Reduction of Field with different u_r materials
不同磁导率下隔离状况

μ_r =100

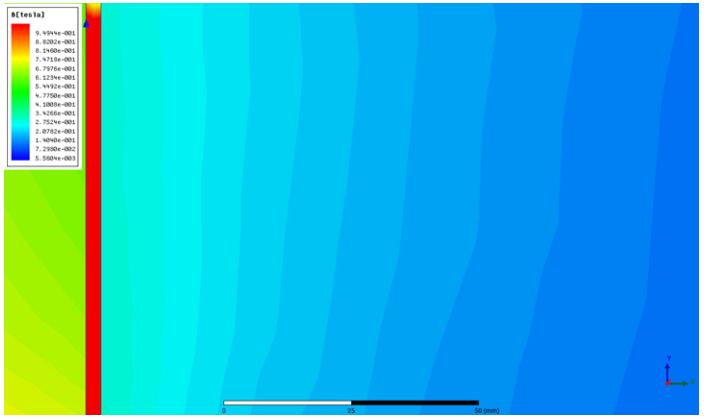

μ_r =50

Screening effect Alternative current excited magnetic field 10kHz

- It is obvious from (a) and (b) that the shield with higher relative permeability can hold more flux lines, suggesting it can prevent more flux lines outside the shield. （a）比（b）隔离效果好
- The relative permeability is adjusted to 50, the flux line distribution from Fig.4 (c) varies a little, compared with 4 (b). （c）的磁力线分布与（b）相近
- Conclusion: Only small μ_r is enough for screening 低磁导率材料足够做隔离措施

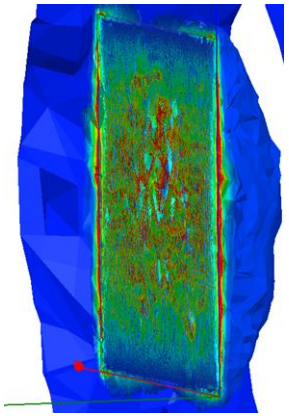

(a) μr =200

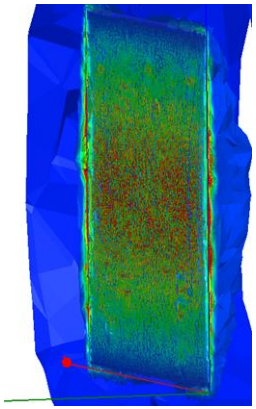

(b) μr =100,

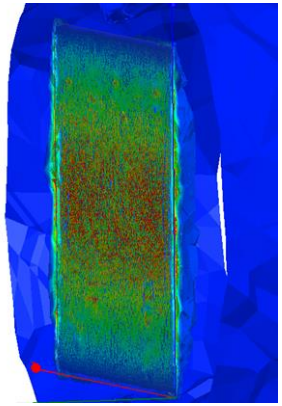

(c) μr =50

EMI screening Test
新材料的隔离测试

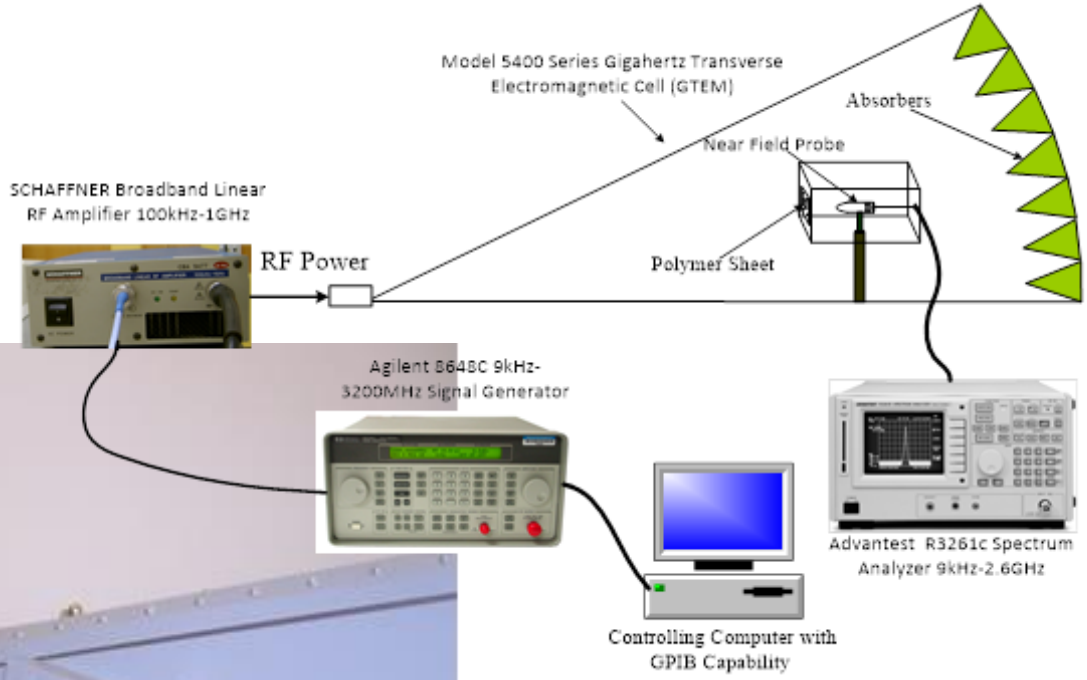

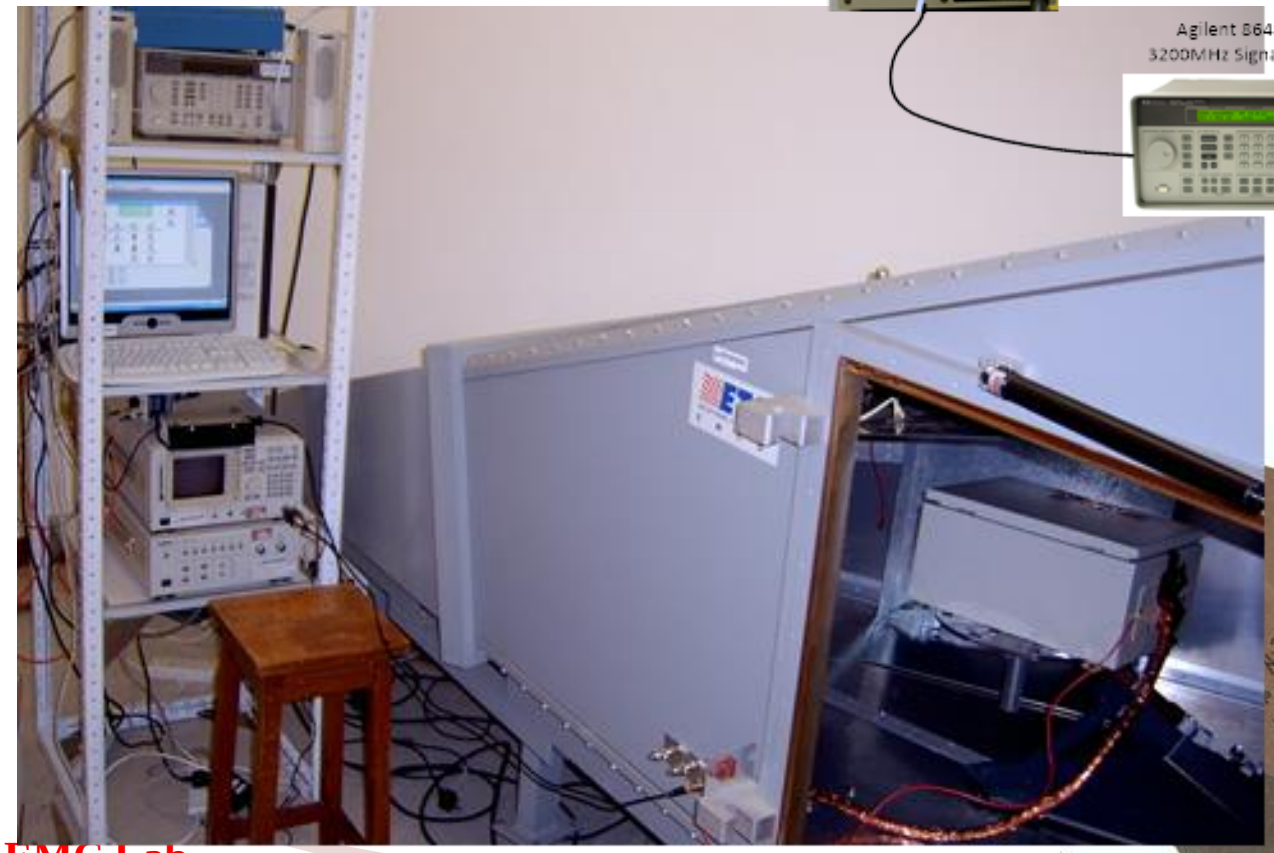

EMI Screening Test Result
新材料的隔离测试结果

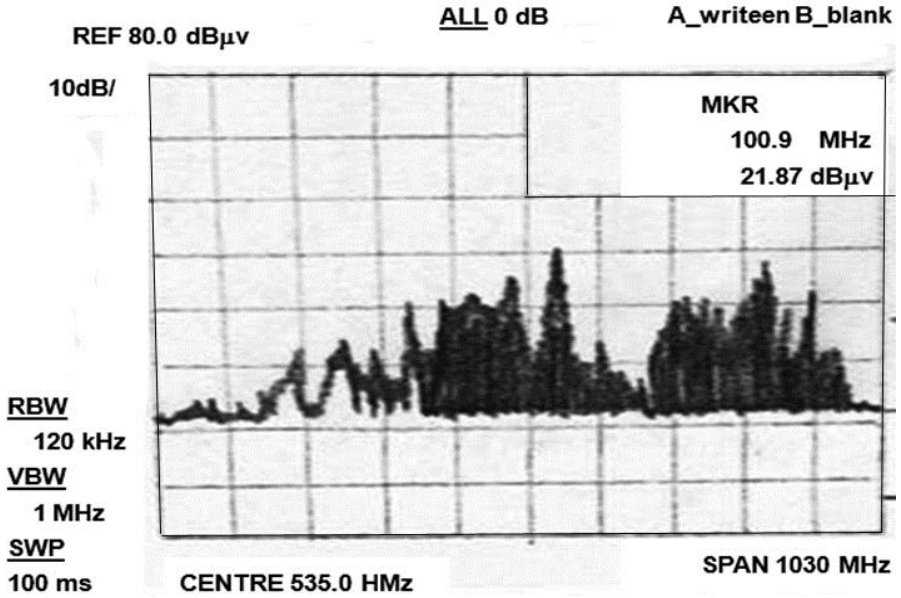

Figure 129: EMI test result for metal sheet with polymer (NiZn60% Materials 1) 聚合物磁性材料板

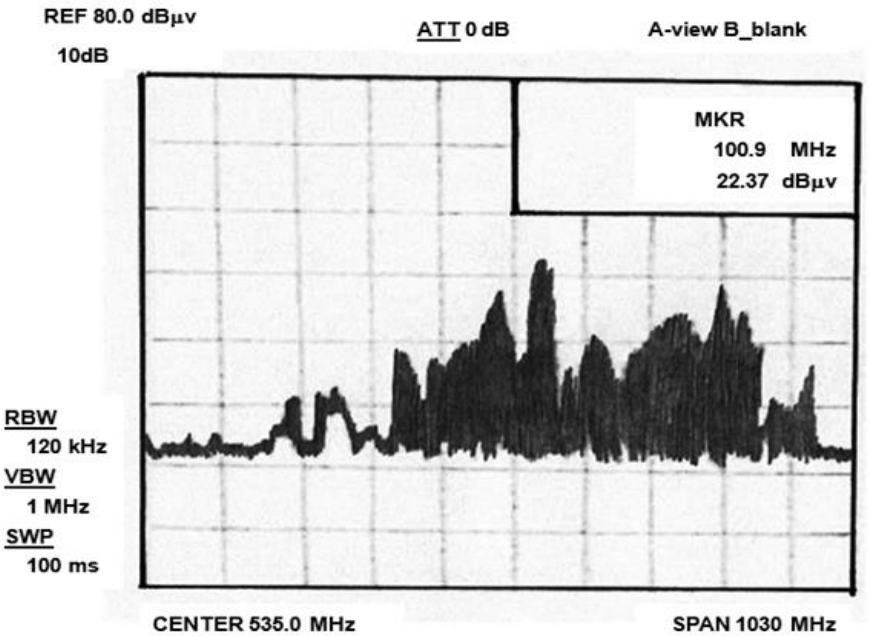

Figure 130: EMI test result for metal sheet金属板

EMI/EMC Test equipment and projects

电磁干扰电磁兼容实验室设备及项目简介

EMC Lab
Department of
Electrical Engineering
電機工程學系

Test equipment实验设备

Amplifier
AR (Amplifier Research)
Model 500A100A
500watts
10 kHz-100 MHz

Antenna
ETS-Lindgren
Model 3142c
26MHz-3GHz

Antenna
ETS-Lindgren
Model 3117
1-8 GHz

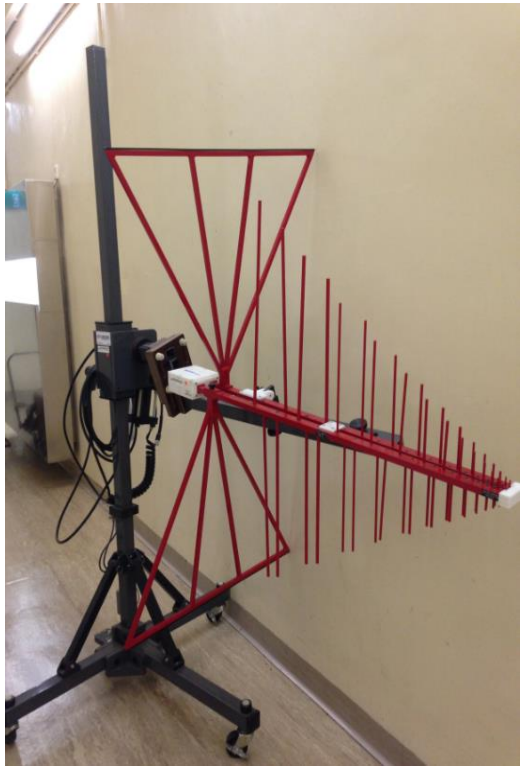

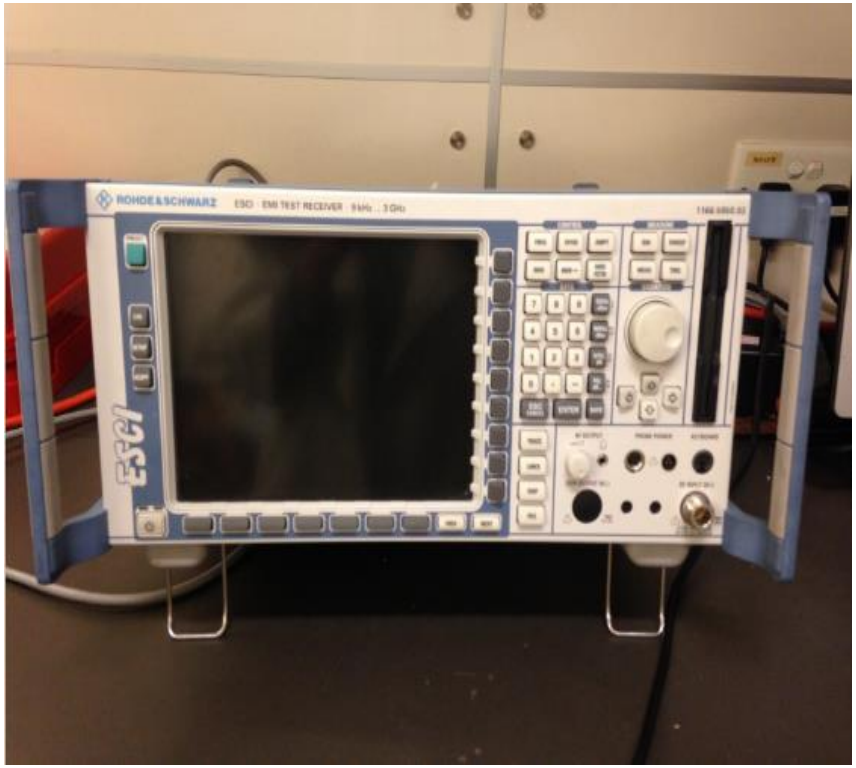

ESCI-EMI Test Receiver
ROHDE&SCHWARZ
9kHz-3GHz

Signal Generator
Agilent
Model 8648C
9k Hz-3200M Hz

EMI Test电磁干扰测试

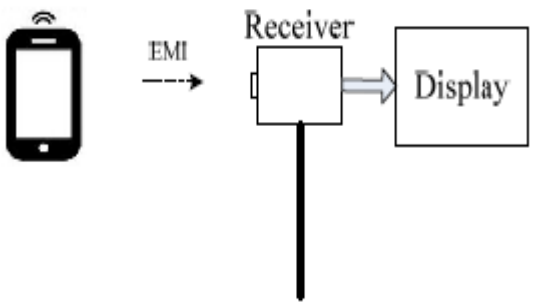

Calibration Test of Antenna 3117, ETS-Lindgren, Measurement at 3m distance

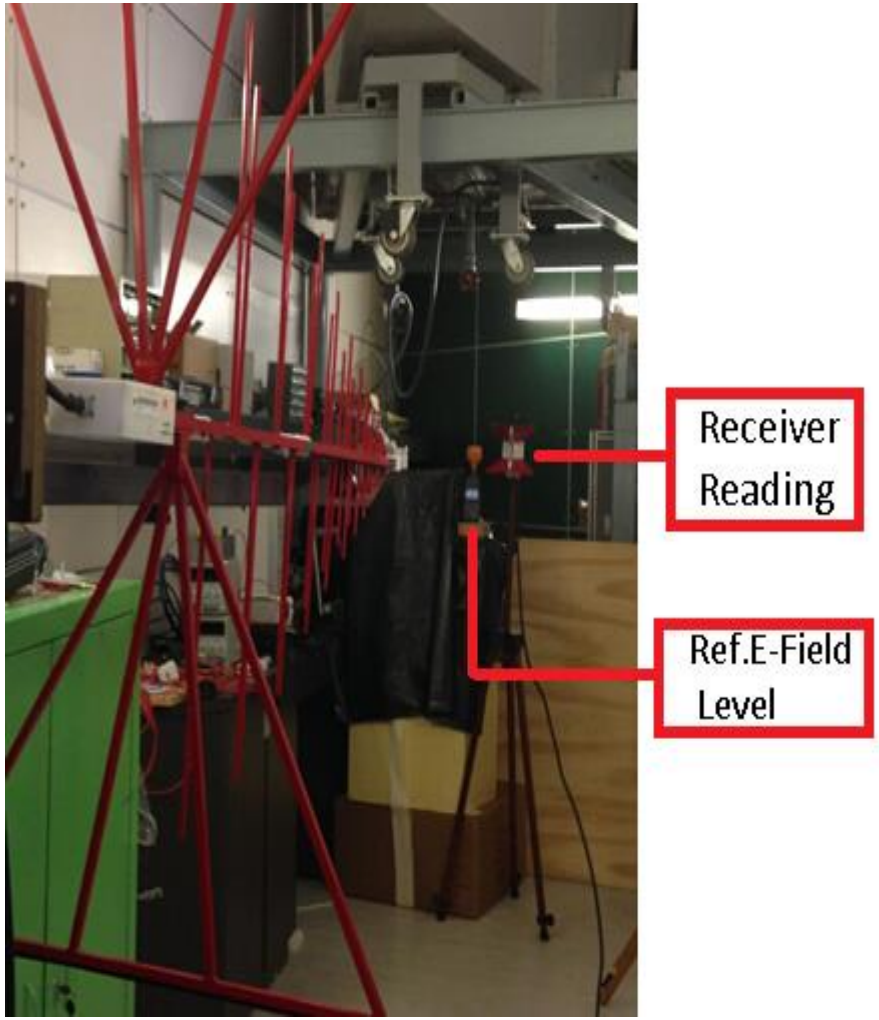

Photo of the measurement

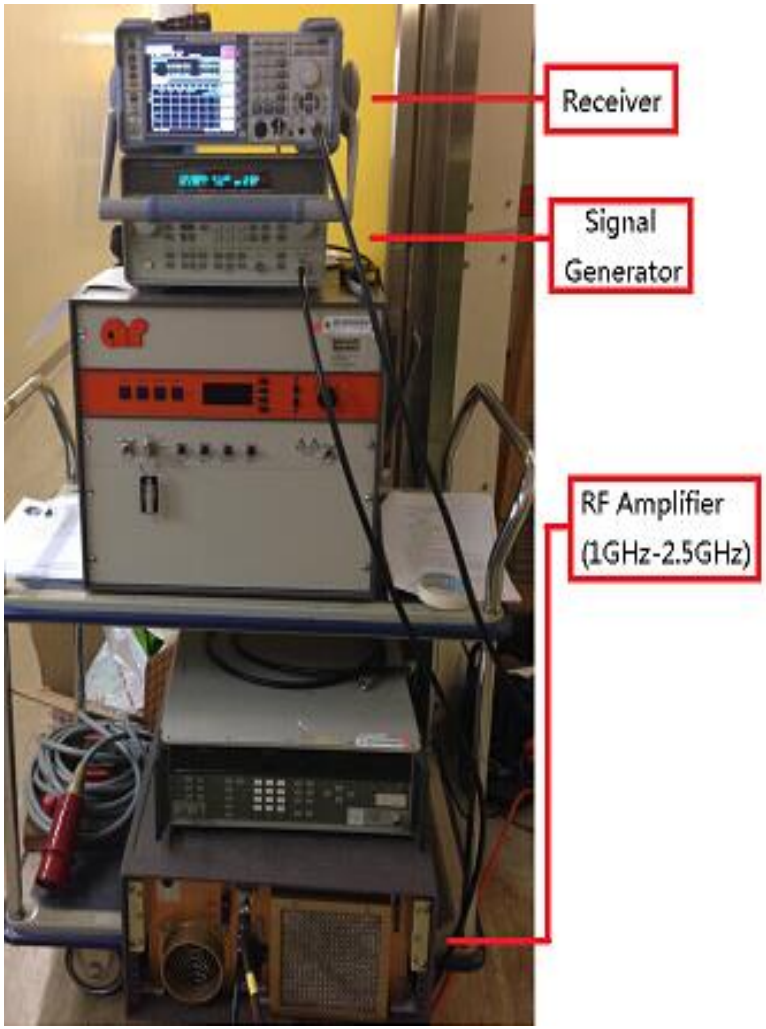

EMC Test电磁兼容测试

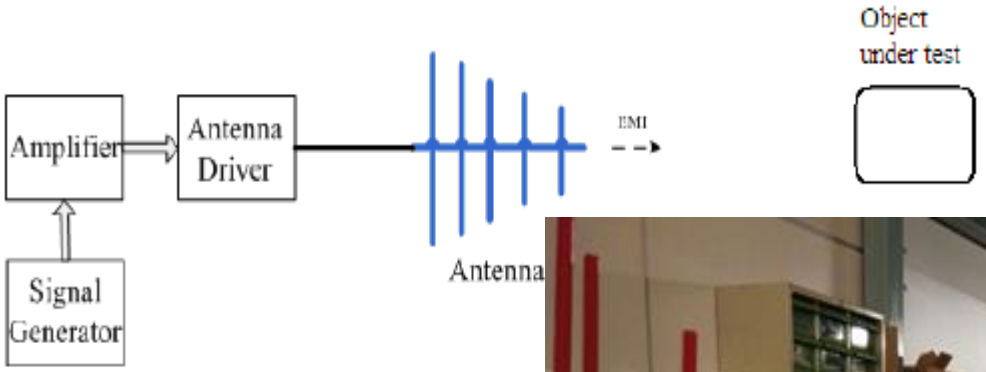

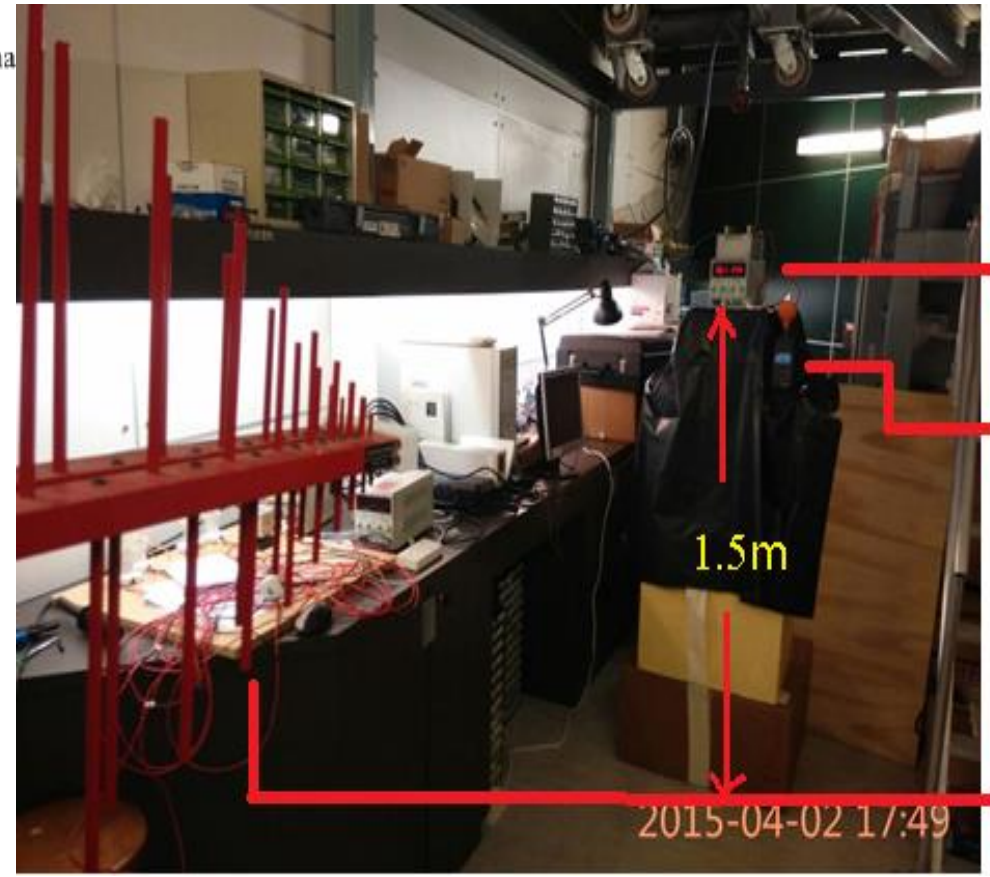

- Appendix
- EMC/EMI Standard related to Railway

与铁路相关的电磁兼容电磁干扰标准

Emission（辐射排放）

- The maximum level of radiated and conductive EMI of any apparatus shall not exceed the levels specified in the European Standard EN50081-1updated to BS EN61000-6-1 2007
- Table 1 summarized the maximum radiated emissions at a distance 0.5m from any component of the railway equipment for the frequency bands.
- Typical maximum allowable quasi-peak radiated emission
- 根据以上标准距离设备0.5m处最大辐射值

Apparatus	Frequency range (MHz)	Max. Electric Field	
		uV/m	dBuV/m
Portable radio	166-171	4.2	12.4
CID Radio	440-470	11.1	20.9
Pager	279-281	7.1	17
Fire Services Department	147-151	3.7	11.4
Police Radio	440-446	11.1	20.9
Mobile phone	824-960	37.1	31.4
Mobile phone	1700-1900	76.6	377
Pacemaker	20Hz-30MHz	-	-

Immunity（电磁抗干扰）

Table 2: Conductive emission for Railway equipment based on EN 60555(up to 40th harmonics), EN55022, EN55014(high frequency harmonics)
基于以上标准车上设备的传导干扰限值

Frequency range	Limits（dBuV）	Relevant standard
0-2kHz	Different limits for each harmonics	EN60555
0.15-0.5MHz	66-56, decrease linearly with log. Freq.	EN55022 or EN55014
0.5-5MHz	56	EN55022 or EN55014
5-30MHz	60	EN55022 or EN55014

Immunity（抗干扰）

Table 3: Immunity and test requirement in Railway environment 基于表格标准的抗干扰限值及测试要求

Environment	Limits and test specification	Limit standard	Test standard
Radiated Electromagnetic field	80-l000MHz, l0V/m 80% AM (1kHz)	ENV50140	IEC-6 1000-4-3
Conducted radio frequency	0.165-80MHz 10V	ENV 50141 EN61000-6-2	IEC-6 1000-4-6
Power frequency magnetic field	l00A/m DC or 50Hz	IEC 6 1000-4-8	IEC 61000-4-8
Electrostatic discharge	6kV contact discharge or 8kV air charge	IEC 6 1000-4-2	IEC 6 1000-4-2
Fast transients	2kV	EN61000-6-2	IEC 6 1000-4-4
Electrical surges	1kV for differential mode 2kV for common mode	EN 550 14-2	IEC 6 1000-4-5
DC magnetic field immunity	0.3mT for 2 minutes	-	-

Table 4: Commonly quoted EMC standard for railway
最常用的火车标准

EN12015	EMC-Product family standard for lifts & escalators - Emission
EN12016	EMC-Product family standard for lifts & escalators -Immunity
BS EN61000-6-1 2007 (EN50081-1)	EMC Generic Emission Standard-Part 1 Domestic environment
BS EN61000-6-2 2005 (EN50082-2)	EMC Generic Immunity Standard-Part2 Industrial environment
EN55022	Limits and methods of measurement of Radio Interference of IT
EN50061	EMC Standard for Cardiac Pacemaker

Table 4: Commonly quoted EMC standard for railway
最常用的火车标准

ENV50121-1	Railways Applications - EMC General
ENV50121-2	**Railways Applications-EMC Emission of the whole railway system to outside world**
ENV50121-3-1	Railways Applications - EMC Train and complete vehicle
ENV50121-3-2	Railways Applications-EMC Rolling stock-apparatus
ENV50121-4	Railways Applications-EMC-Emission and immunity of the signalling and Telecommunications apparatus
ENV50121-5	Railways Applications-EMC-Fixed power supply installations

Table 4: Commonly quoted EMC standard for railway
最常用的火车标准

IEC6 1000-4-1	EMC-Testing measuring techniques-General
IEC6 1000-4-2	EMC-Testing and measuring techniques-Electrostatic discharge requirement
IEC6 1000-4-3	EMC-Testing and measuring techniques-Radio frequency electromagnetic field-immunity tests
IEC6 1000-4-4	EMC-Testing and measuring techniques — Electrical fast transient/burst requirements
IEC6 1000-4-5	EMC-Testing and measuring techniques-Surges immunity tests
IEC6 1000-4-6	EMC-Testing and measuring techniques — Conducted if disturbances above 9kHz immunity tests
IEC6 1000-4-8	EMC-Testing and measuring techniques-Power frequency magnetic field immunity tests
IEC6 1000-4-11	EMC-Testing and measuring techniques-Voltage dips, short interruptions and voltage variations immunity tests
IEC6 1000-5-2	Installation and mitigation guidelines-Earthing and cabling
NRPB-GS11	Guidance as to restriction on exposures to time varying EM field

Table5：Unpreferred locations of equipment
基于以下标准关键设备非优先的位置

Standard	Equipment	Unpreferred location
IEC61000-4-3	Telecom Equipment, Fire Services Department equipment	Near to Power transmission line
EN12015	Lifts, Escalators	Near to Platform Screen Doors control room, Battery room
ENV50121-4	Signalling and telecommunication Apparatus	Near to high power RF transmission system and transformer room
EN50061 BS6902-1:S1	Implantable pacemaker	Near to high power RF transmission system and switchgear room
IEC 6 1000-4-6	UPS	Near to Transformer room or switchgear room
EN55022	Computer /IT equipment	Overhead line
RIA13	Electronic Control Panel	Near to transformer room and switchgear room

Table 6: Exposure limits to electromagnetic fields advised by INIR board.
根据国际非电离辐射委员会，国家放射防护委员会规定的安全限值

Frequency	Electric field V/m	magnetic field A/m
<100Hz	614000/f	1630
0.1-lkHz	614/f(kHz)	163/f(kHz)
1 -30kHz	614	163
0.03-1 MHz	614	4.89/f(MHz)
1-l0MHz	614/f(MHz)	4.89/f(MHz)
10-30MHz	61.4	4.89/f(MHz)
30-400MHz	61.4	0.163
0.4-2GHz	97.1/f(GHz)	0.258/f(GHz)
2-300GHz	137	0.364

Discussion and Future work 讨论和未来工作方向

- The EMI suppression and energy recycling technology for pentagraph arcing
- The development of multi power sources based and its EMI in HSR
- EMI shielding material development
- EMI shielding technology in HSR
- New power electronics for power conversion to reduce EMI
- Prepare for High speed system versus increased in EMI

Power Electronics Research Centre (PERC)

Fully supported from the industry and government.
Research in fundamental study as well as applied research
Aims - to help local industry and the region

电力电子研究中心(PERC)

得到了工业界和政府支持
基础研究和应用研究同时进行
目标 – 提升本地区及其工业界的竞争力

Contact: 郑家伟 教授 Prof. Eric Cheng,
香港理工大学，电机工程学系 Dept. of EE, HK PolyU
Tel: +852-27666162, Email: eeecheng@polyu.edu.hk

Acknowledgement致谢

- The Hong Kong Polytechnic University
  香港理工大学
- Hong Kong Branch of the National Rail Transit Electrification and Automation Engineering Technology Research Centre
  国家轨道交通电气与自动工程技术研究中心 香港分中心
- the National Rail Transit Electrification and Automation Engineering Technology Research Centre
  国家轨道交通电气与自动工程技术研究中心
- South West Jiao Tong University
- 西南交通大学

Thank you!